WORKING MEDIUM : BETRIEBSMEDIUM :	AIR LUFT
COOLANT : KÜHLMEDIUM :	WATER WITH ANTIFREEZE WASSER MIT FROSTSCHUTZ
BORE : BOHRUNG :	Ø 85 mm
STROKE : HUB :	62 mm
SWEPT VOLUME : HUBRAUM :	704 cm³
MAX. WORKING SPEED : MAX. BETRIEBSDREHZAHL :	nmax = 3000 min-1
OVERSPEED (MAX. 4 SEC.) : UEBERDREHZAHL (MAX. 4 SEC.) :	nue = 1.3 x nmax
END PLAY OF CRANKSHAFT AXIALSPIEL DER KURBELWELLE	0.1 ... 0.4 mm

LUBRICATION SUPPLIED FROM ENGINE
UMLAUFSCHMIERUNG MIT DRUCKÖLANSCHLUSS

MAX. WORKING PRESSURE:
MAX. BETRIEBSDRUCK: p= 14 bar **

MAX. PRESSURE (TEMPORARILY MAX. 4 SEC.):
MAX. DRUCK (ZEITWEISE MAX. 4 SEC.): p= 16 bar **

** MEASURING POINT: DISCHARGE PORT
MESSPUNKT: DRUCKANSCHLUSS

MAX. PERMISSIBLE TILT DURING CONTINUOUS WORKING
MAX. ZULAESSIGE NEIGUNG IM DAUERBETRIEB

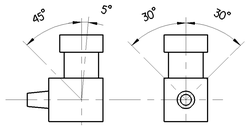

0	SUCTION PORT SAUGANSCHLUSS	
2	DISCHARGE PORT DRUCKANSCHLUSS	M <= 150 Nm
4	GOVERNOR PORT STEUERANSCHLUSS	M <= 25 Nm
8.1	OIL SUPPLY DRUCKÖLANSCHLUSS	M <= 25 Nm
8.2	OIL DRAIN ÖLRÜCKLAUF	
9	COOLANT CONNECTION KUEHLMITTELANSCHLUSS	M <= 35 Nm

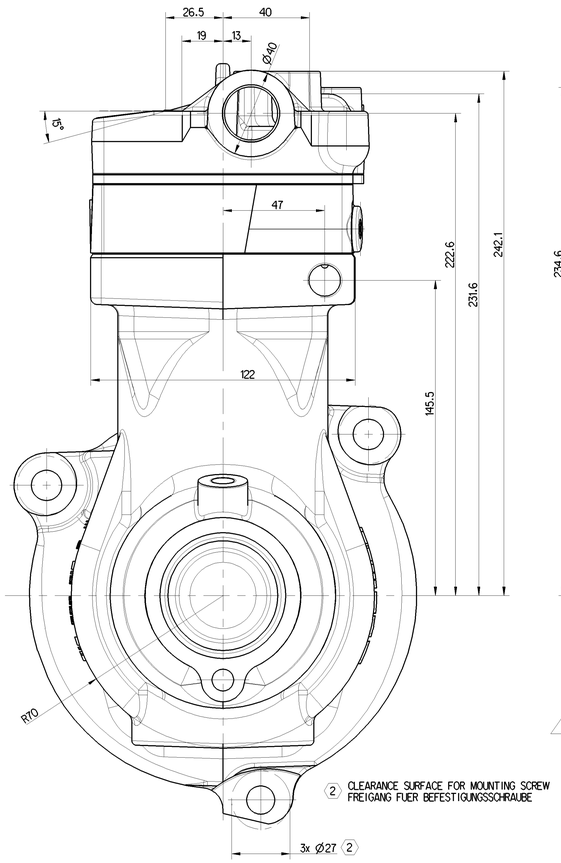

(2) CLEARANCE SURFACE FOR MOUNTING SCREW
FREIGANG FUER BEFESTIGUNGSSCHRAUBE

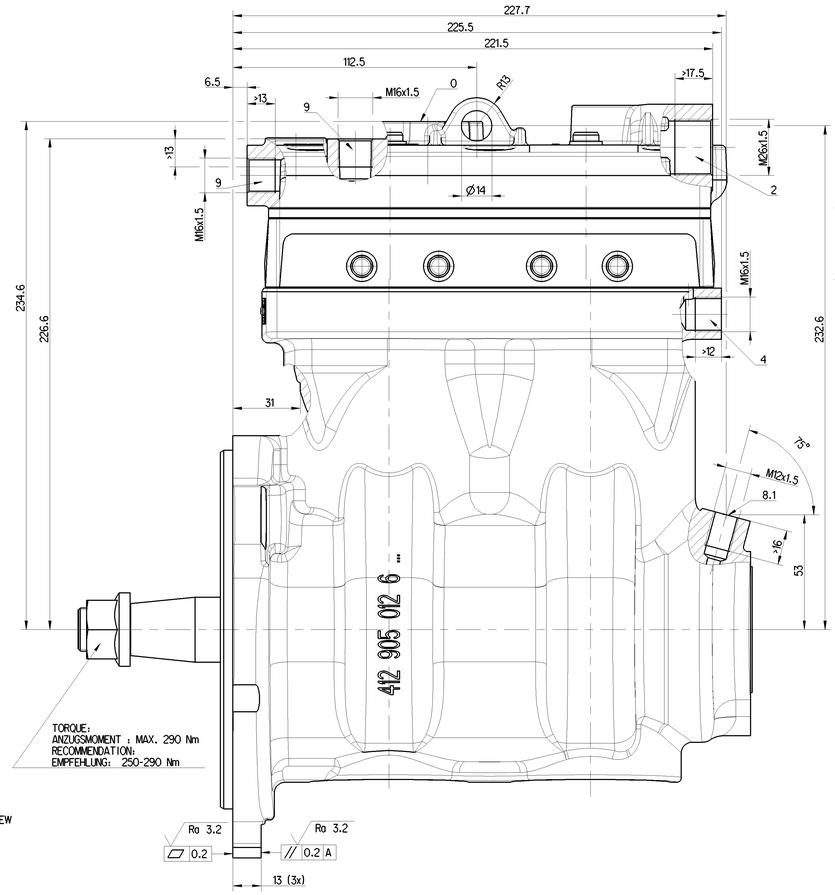

TORQUE:
ANZUGSMOMENT : MAX. 290 Nm
RECOMMENDATION:
EMPFEHLUNG: 250-290 Nm

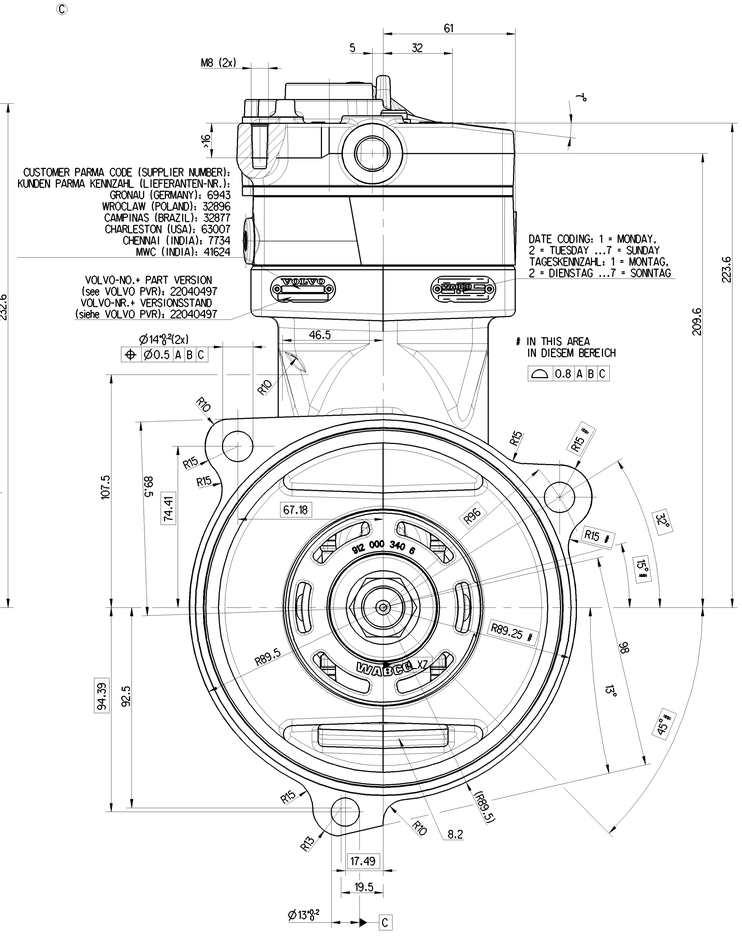

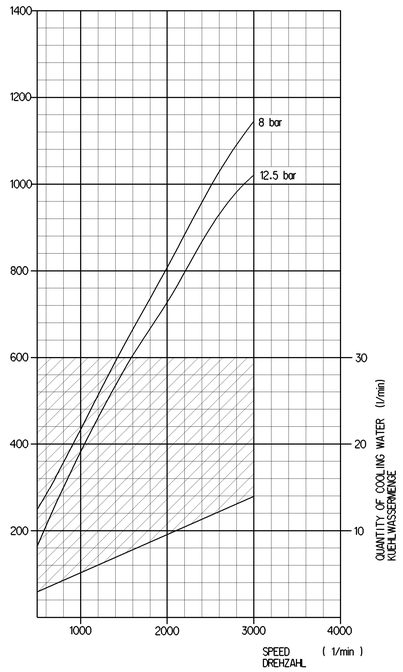

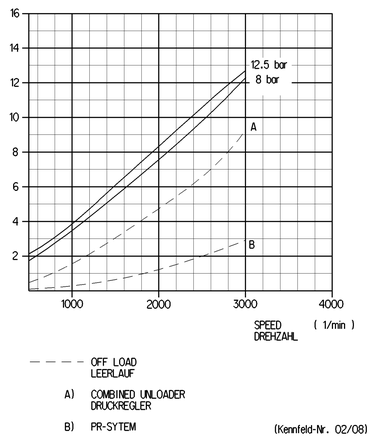

- - - - OFF LOAD
LEERLAUF

A) COMBINED UNLOADER
DRUCKREGLER

B) PR-SYTEM

(Kennfeld-Nr. 02/08)

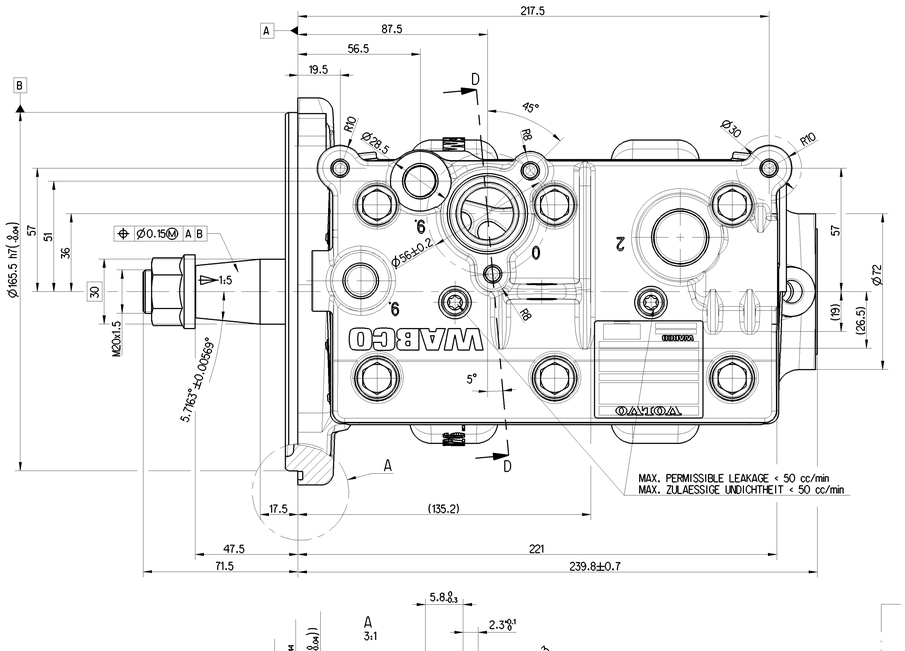

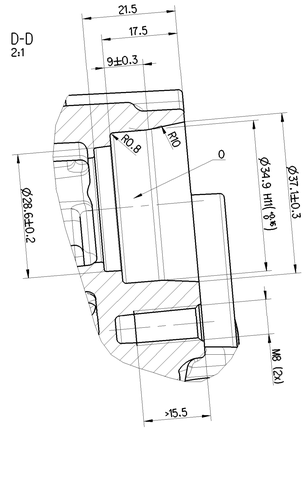

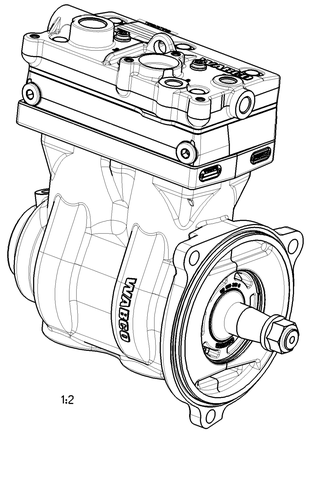

1:2

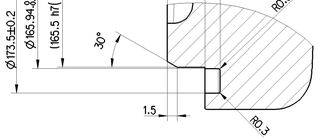

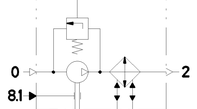

COMPRESSOR WITH OPTIMIZED PISTON
KOMPRESSOR MIT OPTIMIERTEN KOLBEN

General Specification: JED-334-0				
Further Technical Data: 412 704 023 0				
Doc. Code: 035	Sheet: 1 To 7			
General Tolerances JED-261				
Class 1)	Range of Nominal Dimensions (in mm) ≤ 50	> 50 ≤ 180	> 180 ≤ 400	> 400
Fine	0.5	1.0	1.5	2.0
Medium X	1.0	2.0	3.0	4.0
Coarse	2.0	3.5	5.0	6.5
Tapped Holes acc. JED-152				
1) Tolerance Class Applied Crossmarked				

Copyright WABCO®

Date: 2019-01-17	Drawn: Grosskopf	
Date: 2019-02-04	Checked: Jaeger	
Mass: 20.187 kg	Scale: 1:1	Expert: GROSSKOPF
Size: A 0	CAD System: Pro/E	

WABCO

TWIN CYLINDER COMPRESSOR
ZWEIZYLINDER KOMPRESSOR

Material No.	Date of first issue: 2013-01-08
412 704 027 0	Doc.Code: 005 / Language: DE / Sheet: 1/1

Revision:	Indiv. Repl.:	Replaced by
500406 1 x C	5010	884 015 731 0

Vale transcrição ou reprodução de o documento, todo ou parte dele, sem autorização, por qualquer meio ou processo, sejam eles eletrônicos, mecânicos, por fotocópia ou outros quaisquer, quer para cópias parciais ou completas, sem autorização por escrito da WABCO, constitui violação dos direitos autorais da WABCO. Os infratores estão sujeitos a pagamento de indenização por perdas e danos.
Este documento é de propriedade da WABCO. Não pode ser copiado ou divulgado a terceiros sem autorização por escrito da WABCO.
Reproduction and distribution of this document or any part thereof without authorization is strictly prohibited. Violators are liable for damages.
This document is the property of WABCO. It may not be copied or disclosed to third parties without written consent of WABCO.